Siko BV is official distributor for the world leading trademark medmix (formerly Sulzer). Manufacturer and supplier for compatible one and two-component mixing systems including cartridges, mixers, dispensers and accessories

2K-Dispensers – MIXPAC™ MixCoat™ Spray system

Technical Data

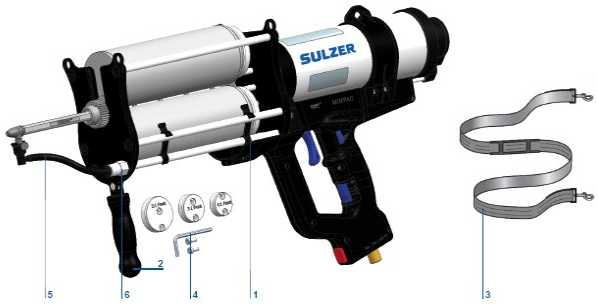

Part Numbers	Description	Ratio
DPS 1500-01	Pneumatic dispenser, MixCoat system	1:1, 2:1, 3:1, 4:1
	Parts	
SP-D-001	Cartridge retention clips (4 pcs.)	Picture part 1
SP-DPS-003	Adjustable handle	Picture part 2
SP-D-002	Shoulder strap	Picture part 3
CK 1500	Converter Kit 1:1, 2:1, 3:1, 4:1	Picture part 4
SP-DPS-001	Tube with quick lock coupling	Picture part 5
SP-DPS-002	Pneumatic push to connect fitting	Picture part 6

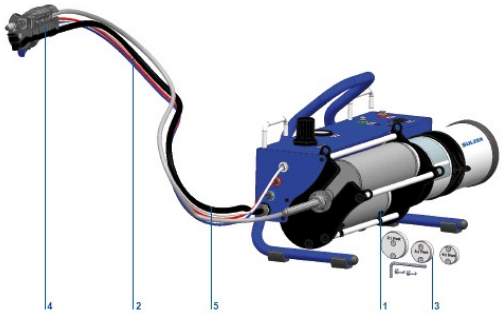

Part Numbers	Description	Ratio
DPF 1500-15	Pneumatic application system, Flex system Length 1.5meter	1:1, 2:1, 3:1, 4:1
DPF 1500-30	Pneumatic application system, Flew system Length 3.0meter	1:1, 2:1, 3:1, 4:1
	Parts	
SP-D-001	Cartridge retention clips (4 pcs.)	Picture part 1
SP-DPF-001	Air tubes preassembled, 1.5meter	Picture part 2
SP-DPF-002	Air tubes preassembled, 3.0meter	Picture part 2
CK 1500	Converter Kit 1:1, 2:1, 3:1, 4:1	Picture part 3
SP-DPF-003	Actuator, hand held (excluding air control tubes)	Picture part 4
SP-DPF-004	Atomizing air tube, 3.0meter including coupling	Picture part 5
SP-DPF-005	Atomizing air tube, 1.5meter including coupling	Picture part 5

Contact:

Siko BV
Winkelskamp 1

7255 PZ Hengelo (gld)
The Netherlands

Tel: +31 (0)575 46 20 25
Fax: +31 (0)575 46 10 87

E-Mail: info@sikobv.nl
Internet: www.sikobv.nl